Downloaded on 30 September 2024 11:08 | Tri Chilemarina - ENG BJS

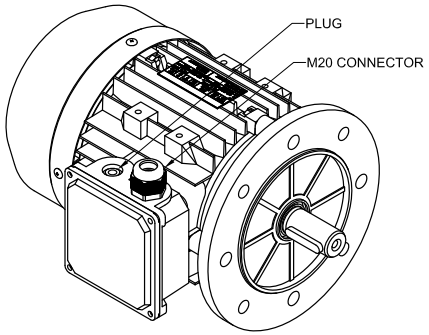

TYPE IEC	kW 1.50	FRM 90L-B5		EFF IE2	INS F	IP 56	WT 15 kg
Y 346-416V YY 173-208V	Hz 50	A 4.00 7.99	RPM 1440	Y 416-499V YY 208-250V	Hz 60	A 3.34 6.68	RPM 1755
MOTOR SPEC IEC-150-90L-B5-IE2-9WT				PART ID 164-076-72089PT			

MOTOR LABEL

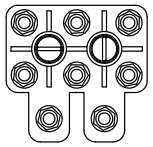

MOTOR TERMINAL BLOCK

SUPPLIER		HILLMAR						
CATALOG No								
SPECIFICATION No		MS2 90L-4 (WH)						
FRAME		90L-B5						
TYPE		IEC						
POWER	W)	1500						
VOLTAGE	V			380				
FULL LOAD CURRENT	A			4.00				
START CURRENT	A			22.3				
FREQUENCY	Hz	50						
FULL LOAD RPM	RPM			1415				
PHASE		3						
LEADS		9						
FULL LOAD EFFICIENCY	%			81.3				
POWER FACTOR	%			0.77				
TORQUE	Nm			10.13				
RATING		IP56						
INSULATION CLASS		F						

MOTOR HEATER	V	115	220
	W	25	25

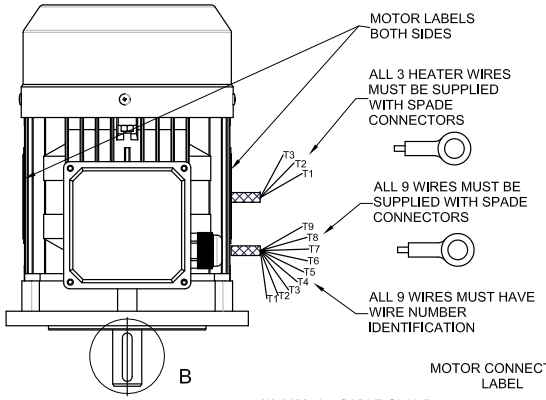

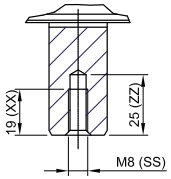

DETAIL 'B'

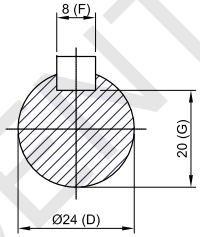

SECTION 'A-A'

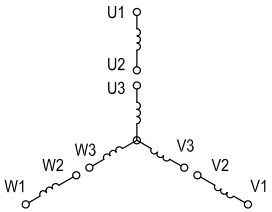

MOTOR CONNECTION DIAGRAM

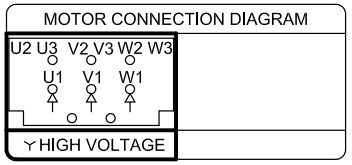

HEATER CONNECTION DIAGRAM

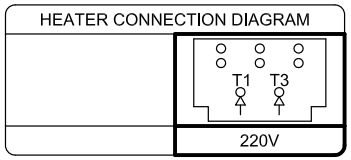

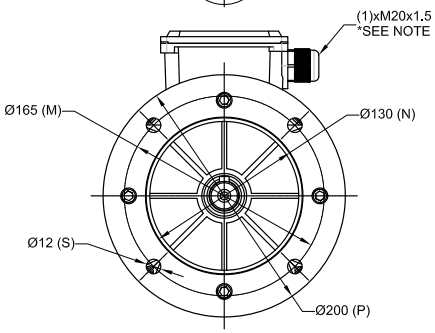

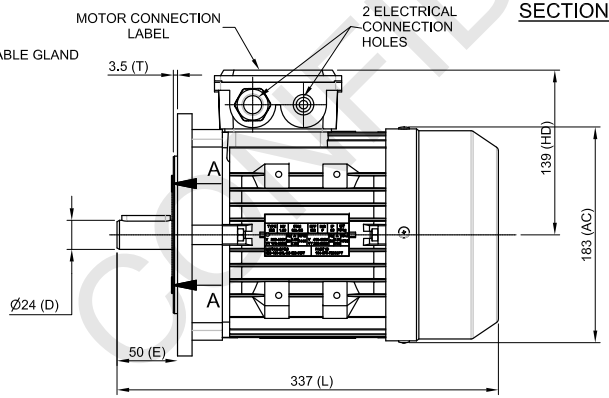

Y
50HZ 346-416V

NOTES:
1. ADDITIONAL M20 CABLE GLAND WHEN MOTOR HEATER REQUIRED
2. TERMINAL BLOCK MUST BE AS SHOWN
3. MOTOR LABELS ON EACH SIDE (2 LABELS PER MOTOR)
4. MOTOR HEATER MUST HAVE 3 WIRES TO BE ABLE TO SWITCH BETWEEN 110 & 220 VAC
5. MOTOR COLOR RAL# 9006

INVENTOR DRAWING

CERTIFIED FOR MANUFACTURE
DESTROY ALL OTHER DRAWINGS
mARKO BY
11 OCT 2017 DATE

Document Template #710-101-62060

Rev.	Apr. by	Description	Date
F	BT	UPDATED DRAWING	08DEC15
E	BT	UPDATED TITLE & ADDED HEATER	22OCT15
J	MTO	UPDATED DRAWING	11OCT16
I	BT	CHANGED VOLTAGE RANGE	05SEP16
H	BT	SPELLING	26APR16
G	BT	CHANGED LABEL, TITLE & DRAWING	23MAR16

Tolerance Unless Otherwise Specified: ISO 2768 - m	Material Spec. Sheet No.:	Process 1 No.:	Process 1:
Tolerance Spec. Sheet No.: 540-401-56438	Material Description:	Process 2 No.:	Process 2:
Projection:	Imperial Crossover:	Process 3 No.:	Process 3:

Company / Project Reference:		Sheet Number: 7.1	
Job Number: 24621701854JB	Document Package No:	Rev.:	Date:
Page: 1 OF 1			
Weight: 26kg			
Drawn By: GD	Date: 16DEC12		
Checked By:	Date:		

ELECTRICAL COMPONENTS
HIST-IEC-150-90L-B5-IE2-9W-IP56-WH
ELECTRIC MOTOR IEC WITH HEATER
ALUMINIUM
BO PART

Hillmar
Hillmar Industries Ltd.
7371 Vantage Way
Delta, BC V4G 1C9
P:604 946-7115 F:604 946-0329
Info@hillmar.com www.hillmar.com

Part ID: 164-076-72089PT Rev.: J

C:\Vault_Workspace\HILLMAR\HILLMAR PRODUCTION\13 COMMON MASTER\1300-01300312 EM-IEC104 HIST-IEC-150-90L-B5-IE2-9W-IP56-WH\72089 HIST-IEC-150-90L-B5-IE2-9W-IP56-WH TECHTOP MOTORS.idw

CONFIDENTIAL
Uncontrolled when printed or downloaded. Verify that this is the correct version before use.
Exploitation of part or all the contents of the document is prohibited without written permission from PT. Bhumi Jepara Service