C/H F1 図面番号 DRAWING NO. 2KV006741 | 変更種別 REV CTG L c | 名称 TITLE (ABBR) CCCW HX STR OUTL | 品質管理 REMARKS 2 | 担当 PREP. D1.4 | M.F. 1

MODEL CODE C,E,*,*,*

普通許容差ハ下記ニヨル
金属削り KDAA3521
溶接品・ガス切断 KDAA3524

コノ図面デ指定スル規格・標準類デ、発行年・変更記号ノ指示ガナイモノハ最新版ヲ適用スルコト

類似 参考 図番号 DRAWING NO. 2KV006741 1/1 変更記号 REV. MARK 7

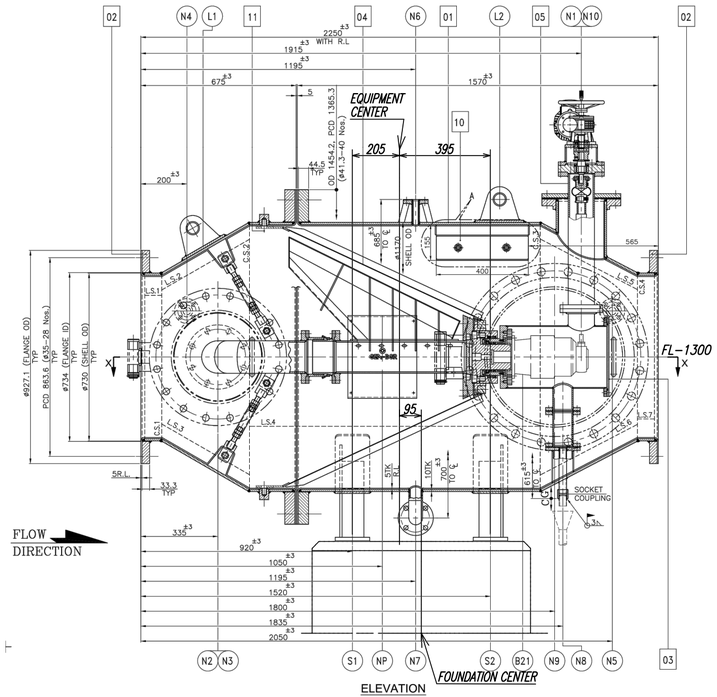

ELEVATION

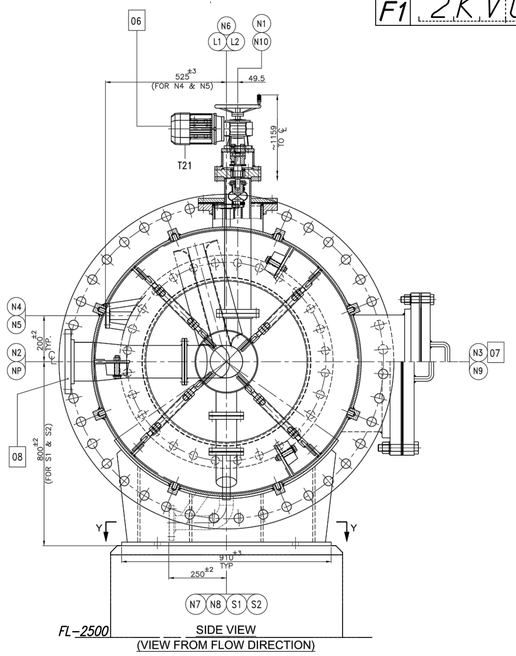

SIDE VIEW
(VIEW FROM FLOW DIRECTION)
[ARRANGEMENT-A]

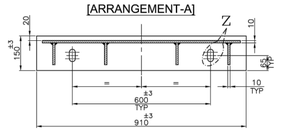

SECTION-YY

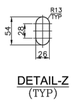

DETAIL-Z (TYP)

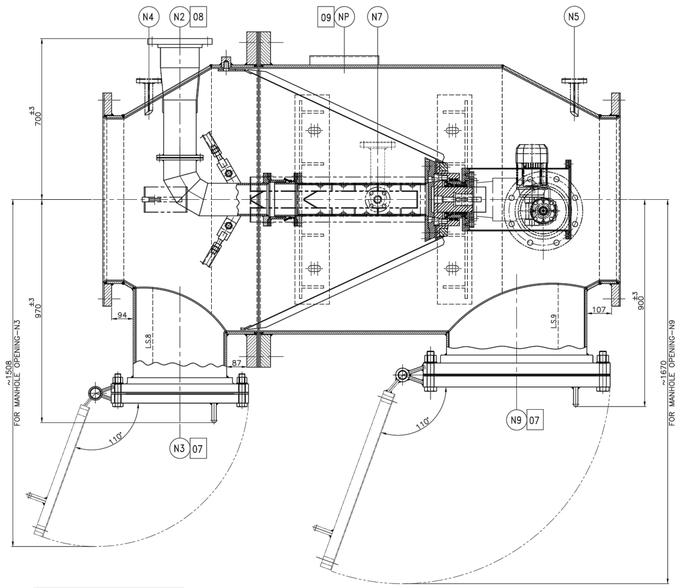

SECTION - XX

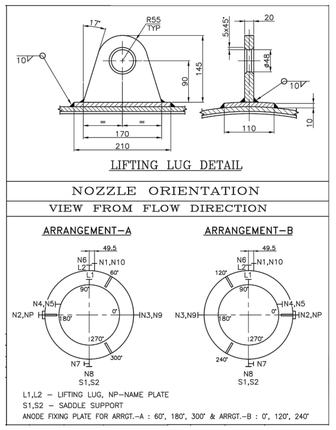

SL. NO.	DESCRIPTION	QTY.	MATERIAL SPECIFICATION	REMARKS
01	SHELL	1	CARBON STEEL / A 516 Gr.70	RUBBER LINED
02	SHELL FLANGE	2	CARBON STEEL / A 105	RUBBER LINED
03	GEAR SEALING	1	DUPLEX STEEL / UNS S32205/S31803	
04	SCREEN BASKET	1	DUPLEX STEEL / UNS S32205/S31803	
05	DRIVE SHAFT	1	DUPLEX STEEL / UNS S32205/S31803	
06	GEARED MOTOR DRIVE B21,T21	1	-- / --	
07	MANHOLE	2	CARBON STEEL / A 516 Gr.70/A 105	RUBBER LINED
08	DEBRIS OUTLET	1	DUPLEX STEEL / UNS S32205/S31803	
09	NAME PLATE (NP)	1	STAINLESS STEEL / --	
10	SACRIFICIAL ANODE	3	ALUMINUM ALLOY / --	
11	INTERNAL FASTENERS	SET	DUPLEX STEEL / UNS S32205/S31803	

NOZZLE SCHEDULE

NOZZLE	SERVICE	SIZE	QTY	PIPE / FLANGE MATERIAL	REMARKS
N1	SHAFT CONNECTION TO GEARED MOTOR	DN 100 x SCH.40	1	UNS S32205/S31803	
N2	DEBRIS OUTLET	DN 150 x SCH.40	1	UNS S32205/S31803 A105	DUPLEX LINED
N3	MANHOLE (FRONT SIDE)	DN 400 x 10 TK.	1	A 516 Gr.70 / A105	RUBBER LINED
N4	D.P TRANSMITTER STUB PLUS	DN 25 x SCH.40	1	A 106 Gr. B / A105	RUBBER LINED
N5	D.P TRANSMITTER STUB MINUS	DN 25 x SCH.40	1	A 106 Gr. B / A105	RUBBER LINED
N6	VENT	DN 25 x SCH.40	1	A 106 Gr. B / A105	RUBBER LINED
N7	DRAIN	DN 50 x SCH.40	1	A 106 Gr. B / A105	RUBBER LINED
N8	CONTROL DRAIN	DN 25 x SCH.40	1	UNS S32205/S31803	
N9	MANHOLE (REAR SIDE)	DN 600 x 10 TK.	1	A 516 Gr.70 / A105	RUBBER LINED
N10	DRIVE SHAFT ASSY. PROVISION	DN 200 x SCH.20	1	A 106 Gr. B / A105	RUBBER LINED

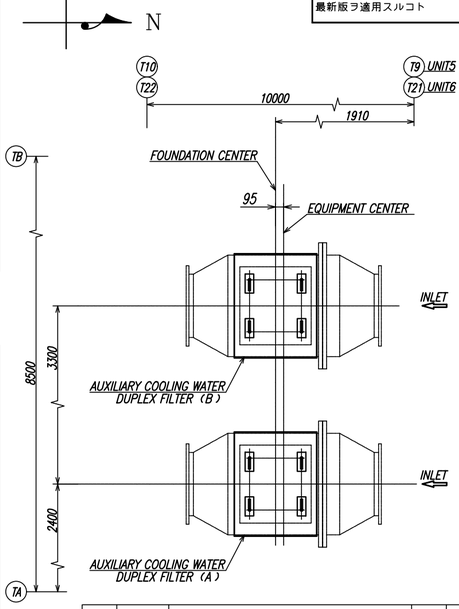

NOTE
1. FILTER(A) IS IDENTICAL TO FILTER(B).
2. FILTER PERFORATION SIZE ø2mm
3. DESIGN CODE: ASME SEC.VIII Div.1 2017 EDITION and MANUFACTURER's STANDARD.
4. ALL DIMENSIONS ARE IN "mm" UNLESS SPECIIFIED.
5. ALL NOZZLE FRANGES SHALLBE AS PER ASME B16.5 CL 150 Lbs SOFF WITH HUB UNLESS SPECIFIED.
6. SHELL MAIN FLANGE SHALL BE AS PER AWWA C207 CLASS-D TABLE-2.
7. ALL BOLT HOLES ARE STRADDLE TO CENTER LINE UNLESS SPECIFIED.
8. RUBBER LINING STANDARD EN 14879 OR EQUIVALENT
   RUBBER LINING : NEOPRENE RUBBER
   THICKNESS : 5mm (SHELL INTERNAL SURFACE)
   3mm (NOZZLE INTERNAL SURFACE)

KKS CODE

	AUXILIARY COOLING WATER DUPLEX FILTER A	AUXILIARY COOLING WATER DUPLEX FILTER B
UNIT-5	50PCA11 AT010	50PCA12 AT010
UNIT-6	60PCA11 AT010	60PCA12 AT010

WEIGHTS

	COMPLETE-DRY	OPERATING
AUXILIARY COOLING WATER DUPLEX FILTER	2500 kg	6000 kg

DESIGN SPECIFICATIONS

DESIGN PRESSURE	10 BAR (g)
TEST PRESSURE	15 BAR (g)
DESIGN TEMPERATURE	40 deg. C
DESIGN FLOW RATE	4,200 m3/hr

REFERENCE DRAWING
FOUNDATION OUTLINE FOR AUXILIARY COOLING WATER DUPLEX FILTER:
TJB56-L1-OFF-C-PG_-C-DFN-3029(2KV006689)

ISSUED FOR AS-BUILT

The information in this material is confidential and contains our intellectual property including know-how. It shall not be disclosed to any third party, copied, reproduced, used for unauthorized purposes nor modified without prior written consent of us. And please get them back this document after you have done with it.
Toshiba Energy Systems & Solutions Corporation
Keihin Product Operations

REV	DATE	DESCRIPTION	BY	CHKD	APPD
4	JAN.21.2022	ISSUED FOR AS-BUILT	D.W	Y.I.	Y.I.
3	Aug.29.2019	REVISED NOTE 6.	S.K.	Y.I.	Y.I.
2	Jul.11.2019	REVISED AS PER DESIGN PROGRESS	S.K.	Y.I.	Y.I.
1	Feb.01.2019	REVISED AS PER DESIGN PROGRESS	N.K.	Y.T.	Y.I.
0	Dec.19.2018	ISSUED FOR CONSTRUCTION	N.K.	Y.T.	Y.I.

OWNER
PT.Bhumi Jati Power

PROJECT TITLE
TANJUNG JATI B EXPANSION (JAWA-4)
COAL FIRED STEAM POWER PLANT
2 x 1,000 MW

OWNER'S ENGINEER
PÖYRY

EPC CONTRACTORS
Sumitomo Corporation
PT. Wasa Mitra Engineering
AvantPower Japan Ltd.

PROJECT DRAWING NO. TJB56-L1-OFF-C-PCB-M-DRD-2611 | REV 4

APPD	INOUE	Y.I.	SCALE	NTS	
CHDK	KURITA	S.K.			
			UNITS	VIEW	
BY	KANUNGO	N.K.	mm/m	ISO/PLAN/1ST/3RD	

TITLE
OUTLINE DRAWING FOR AUXILIARY COOLING WATER DUPLEX FILTER

EPC LOT SUB-CONTRACTOR
TOSHIBA

EPC LOT SUB-CONTRACTOR DRAWING NO. 2KV006741 | REV L
SHEET NO. 1 OF 1

Y.Inoue AUG.-29-'19	Y.Inoue JUL.-11-'19	Y.Inoue JUL.-10-'19	Y.Inoue FEB.-01-'19	Y.Inoue DEC.-19-'18	Y.Inoue NOV.-30-'18	Y.Inoue JUN.-01-'18	Y.Inoue MAR.-22-'18	Y.Inoue JAN.-30-'18	承認 APPROVED BY	
Y.Inoue AUG.-29-'19	Y.Inoue JUL.-11-'19	Y.Inoue JUL.-10-'19	Y.Takagi FEB.-01-'19	Y.Takagi DEC.-19-'18	Y.Takagi NOV.-29-'18	Y.Inoue JUN.-01-'18	Y.Inoue MAR.-22-'18	Y.Inoue JAN.-30-'18	調査 REVIEWED BY	
S.Kurita AUG.-29-'19	S.Kurita JUL.-11-'19	S.Kurita JUL.-10-'19	N.KANUNGO FEB.-01-'19	N.KANUNGO DEC.-19-'18	N.KANUNGO NOV.-28-'18	Y.Takagi JUN.-01-'18	S.Kurita MAR.-22-'18	S.Kurita JAN.-30-'18	担当 PREPARED BY	
K	J	H	G	F	E	D	C	B	REV. 箇所	XIT05,06
Revised note 6.	Corrected the strainer direction in key plan.	Internal revision up	Revised as per design progress	Issued for construction	Internal Revision	Revised as per Design Progress.	Revised as per Customer's Comment.	Revised as per Customer's Comment.	記事 CONTENTS	M211995 CE 1603 M211996 CE 1603

変更 REVISIONS

Y.Inoue JAN.-21-'22
Y.Inoue JAN.-21-'22
D.Waki JAN.-21-'22
L
・ISSUED FOR AS-BUILT.

尺度 SCALE NTS
単位 UNITS mm

承認 APPROVED BY Y.Inoue JUL.-07-'17
調査 REVIEWED BY S.Kurita JUL.-07-'17
担当 PREPARED BY N.KANUNGO JUL.-07-'17

TOSHIBA 東芝エネルギーシステムズ株式会社
TOSHIBA ENERGY SYSTEMS & SOLUTIONS CORPORATION

名称 TITLE
OUTLINE DRAWING FOR AUXILIARY COOLING WATER DUPLEX FILTER
TANJUNG JATI B RE-EXPANSION PROJECT 5&6 2x1000MW

図面番号 DRAWING NO. 2KV006741 1/1 | 変更記号 REV. MARK L

T 保管 REGISTERED JAN.-21-'22 | 電子承認システム適用