Downloaded on 30 September 2024 11:08 | Tri Okta Ervina - ENG BJS

NIPPON TSUSHO CO., LTD.

NO.	REVISION	DATE	CORRECTOR	APP'D

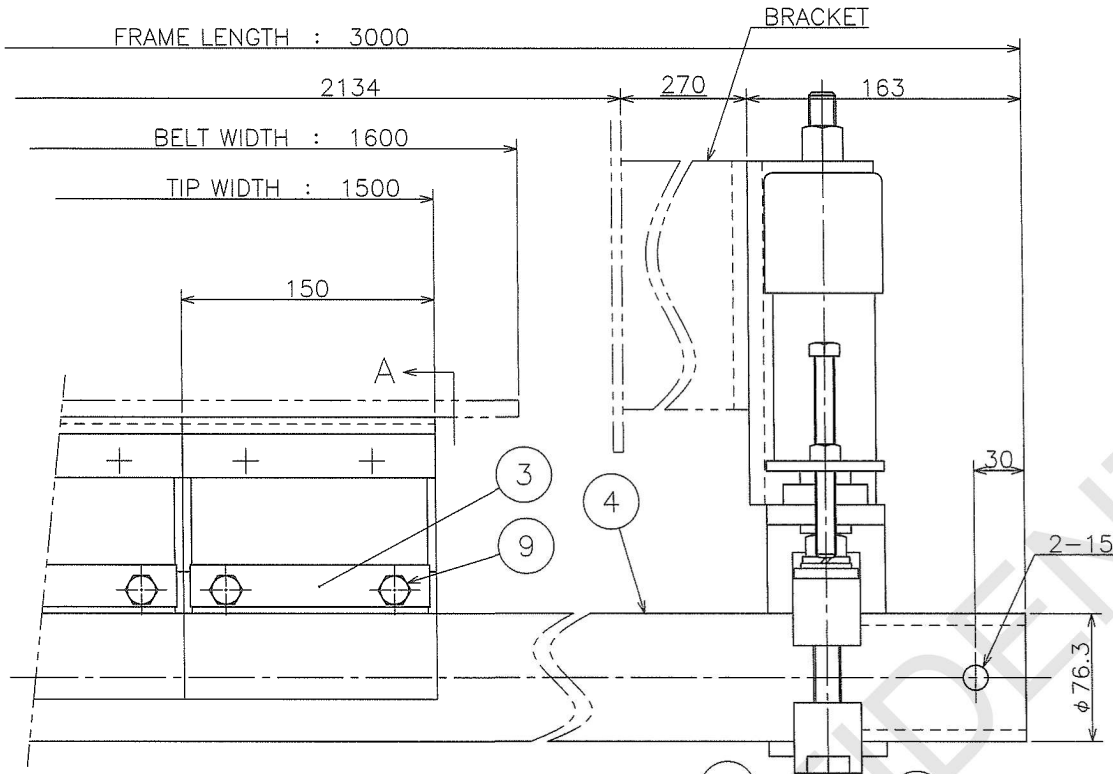

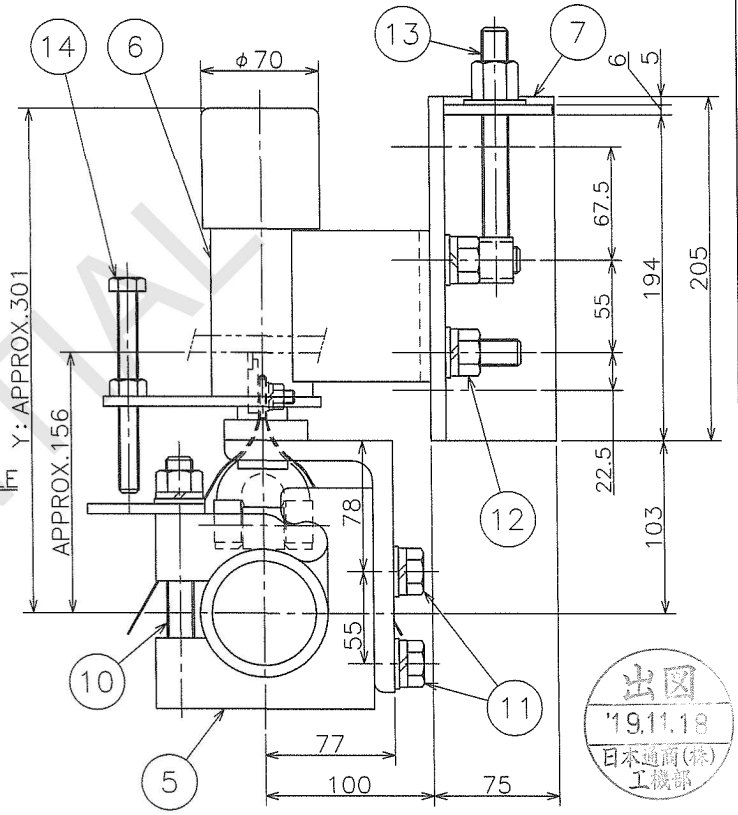

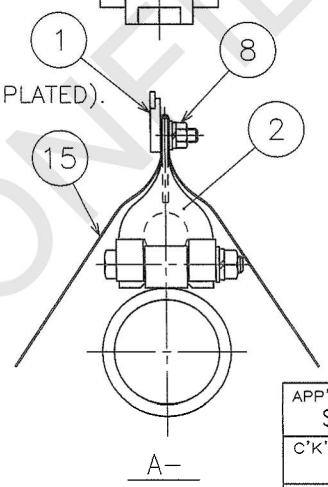

※EXCEPT: ④FRAME(65A)

※EXCEPT: ⑩⑫⑬⑭ARE MADE OF SS400(UNICHROME PLATED).

NO.	PARTS NAME	MATERIAL	Q'ty	REMARKS
15	COVER SHEET	POLYETHYLENE	10	1t
14	STOPPER M12x120	SUS304	2	NUT
13	ADJUSTER BOLT M16	SUS304	2	NUT M16. PW(M20)
12	NUT M16	SS400	4	PW.SW(SUS304)
11	BOLT M16x45	SUS304	4	PW. SW.
10	BOLT M16x140	SUS304	2	NUT. PW. SW.
9	BOLT M10x75	SUS304	20	NUT. PW. SW.
8	NUT M8	SUS304	20	PW. SW.
7	BRACKET	SS400	1set	L75x9
6	WEIGHT DEVICE	SS400	1set	65A
5	CLAMPER	FC250	1set	65A
4	FRAME	STPG370	1	65A-Sch80
3	FIXATIVE PLATE	SS400	20	
2	CUSHION	RUBBER/SS400	10	R40
1	TIP	WC/SS400	10	R(3x10)

●After press adjustment,the Y dimension will increase by 325mm.

PROJECT : Tanjung Jati B(2500t/h CSU)
WORK No.: BK1BA88

BW 1600 × TW 1500

APP'D Saito	QUANTITY 2sets		CUSTOMER IHI Transport Machinery Co.,Ltd.
C'K'D'	WEIGHT 77.4kg/s	SCALE 1/3	TITLE BELLE BANNE RF(65A)
DWN H.S		DATE DRAWN MAY 7,2018	GENERAL VIEW
			DRAWING NO. NA3- T3180038E

出図 '19.11.18 日本通商(株) 工機部

Developing tomorrow for tomorrow's living
NIPPON TSUSHO CO., LTD.

CONFIDENTIAL
Uncontrolled when printed or downloaded. Verify that this is the correct version before use.
Reproduction of part or all the contents of the document is prohibited without written permission from PT. Bhumi Jepara Service