Downloaded on 27 September 2024 11:36 | Tri Okta Ervina - ENG BJS

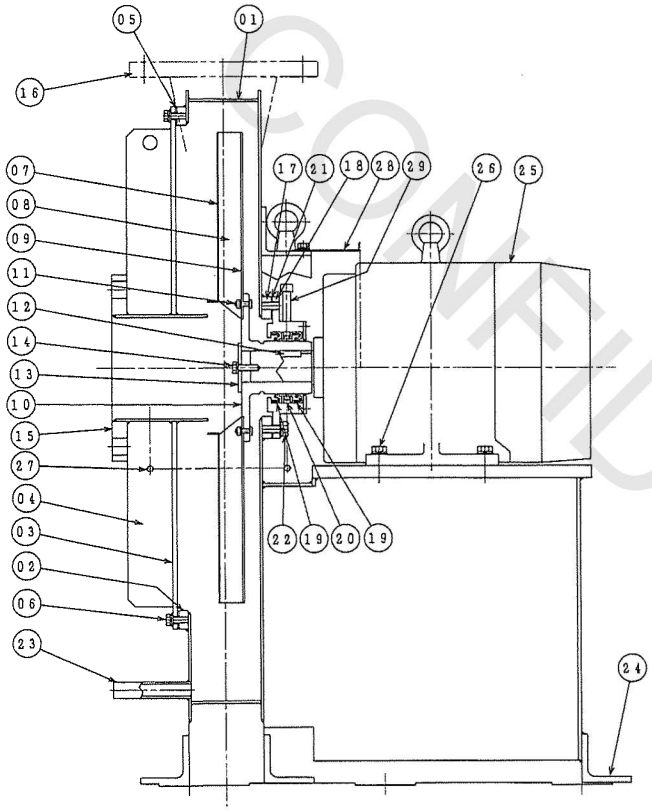

Non asbestos packing is used for use packing.

NO.	PARTS NAME	MATERIAL	REMARKS
29	AIR INLET	SGP	1/8"
28	WEATHER COVER	SS400	t1.6
27	RETURN PIPE	SUS304	φ8
26	MOTOR SET BOLTS	SS400	M10 SW.W with galvanizing Trivalent chromium electrolytic plating
25	MOTOR		TATUNG
24	FOUNDATION	SS400	L65x65x8
23	DRAIN PIPE	SGP	15A
22	STUFFING BOX SET BOLTS	SS400	M10×4 SW.W
21	PACKING		t1.5 T/#1995
20	LANTERN RING	SS400	
19	OIL SEAL	FKM	SB70x95x13 NOK
18	STUFFING BOX	SS400	
17	TAP SEAT	SS400	
16	DISCHARGE FLANGE	SS400	125A JIS10kg/cm² FF
15	SUCTION FLANGE	SS400	150A JIS10kg/cm² FF
14	IMPELLER SET BOLT	SS400	M8 LEFT SCREW SW
13	WASHER	SS400	
12	MOTOR KEY	S45C	
11	BOLT NUTS	SCM435	M6 SW
10	HUB	SUS304	φ198
09	IMPELLER MAIN PLATE	SS400	t2.3
08	IMPELLER BLADE	SS400	t1.6
07	IMPELLER SIDE PLATE	SS400	t1.6
06	SUCTION COVER SET BOLTS	SCM435	M8x24 SW.W
05	PACKING		6mm P/#3300
04	SUCTION RIB	SS400	t6
03	SUCTION COVER	SS400	t6
02	TAP SEAT	SS400	t12
01	CASING	SS400	t3.2

PARTS LIST

CONFIDENTIAL

MESSRS: Tanjung Jati/Republik Indonesia

TYPE: TVKO-5A TURBO BLOWER XIT05

ORDER. NO: ULLW86000.86100

MAIN OIL TANK VAPOUR EXTRACTOR(A)(B)

FAN・BLOWER	
AIR VOLUME	24m³/min
STATIC PRESSURE(at20℃)	0.07 bar
REVOLUTION	3000min⁻¹
TEMPE.	20 ℃
HUMIDITY	65 %

MOTOR	
MAKER	TATUNG
TYPE	FPFC
OUTPUT&Hz	5.5 kW 50Hz
POLES&PHASE	2 P 3φ
RPM/VOLT	3000min⁻¹ 380V

ORDER	APPROVED	DESIGNED
1 SET	T. IWATA	F. MATSUMURA
SCALE(mm)	ANGLE	DRAWING DATE
1/5	3 RD	JUL.10.2018

MARK	DATE	PREPARED BY	CONTENT	APPROVED BY
△				
△				

Suiden Okamotoblower Co., Ltd

DWG. NO. MANUFACT. NO. 180242

K3-180242a

Uncontrolled when printed or downloaded. Verify that this is the correct version before use.
Reproduction of part or all the contents of the document is prohibited without written permission from PT. Bhumi Jepara Service

Tanjung Jati B Expansion (Jawa-4) Coal Fired Steam Power Plant 2 x 1,000 MW

Strategic Spare Part List #5

Item No.	Equipment Tag Number (KKS) Level 0 (Total Plant)	Level 1 (System Code)			Level 2 (Equipment Code)			Level 3 (Component Code)			Equipment Name	Description of Spare Items	Supplier's Name	Catalogue or Part no.	Qty per Unit	Current Unit Price (USD)			Total Amount (USD)			Lead Time for Delivery (CIF basis)	Sketch	Cross Reference Drawing	Expected frequency of replacement	Remarks
	G	F_0	$F_1F_2F_3$	F_N	A_1A_2	A_N	A_J	B_1B_2	B_N						(nr., pcs, set, etc)	CIF	FOB	EXW	CIF	FOB	EXW	(Month)				
8	EHC AND LUBE OIL																									
TJB5-SS-MECH-MOP-001	5	0	MAV	01/02	AP	001	-	-	-	MAIN OIL PUMP A/B	Neck Bush	TOSHIBA ESS	TJB56-L-1-OFF-C-00-M-LST-2010 (Sec.I, Sheet-14, Parts No.9 on drawing)	4 pc	Later	Later	Later	Later	Later	Later	Later	TJB56-L-1-OFF-C-00-M-LST-2010 (Sec.I, Sheet-14, Parts No.9 on drawing)	TJB56-L-1-OFF-C-MAV-M-DRD-2650	4 years	Qty.indicated is applicable for 2 Plant units-
TJB5-SS-MECH-MOP-002	5	0	MAV	01/02	AP	001	-	-	-	MAIN OIL PUMP A/B	Hex Bolt with Washer	TOSHIBA ESS	TJB56-L-1-OFF-C-00-M-LST-2010 (Sec.I, Sheet-14, Parts No.10 on drawing)	16 pc	Later	Later	Later	Later	Later	Later	Later	TJB56-L-1-OFF-C-00-M-LST-2010 (Sec.I, Sheet-14, Parts No.10 on drawing)	TJB56-L-1-OFF-C-MAV-M-DRD-2650	4 years	Qty.indicated is applicable for 2 Plant units-
TJB5-SS-MECH-MOP-003	5	0	MAV	01/02	AP	001	-	-	-	MAIN OIL PUMP A/B	Ball Bearing	TOSHIBA ESS	TJB56-L-1-OFF-C-00-M-LST-2010 (Sec.I, Sheet-14, Parts No.14 on drawing)	4 pc	Later	Later	Later	Later	Later	Later	Later	TJB56-L-1-OFF-C-00-M-LST-2010 (Sec.I, Sheet-14, Parts No.14 on drawing)	TJB56-L-1-OFF-C-MAV-M-DRD-2650	4 years	Qty.indicated is applicable for 2 Plant units-
TJB5-SS-MECH-MOP-004	5	0	MAV	01/02	AP	001	-	-	-	MAIN OIL PUMP A/B	Bearing Nut	TOSHIBA ESS	TJB56-L-1-OFF-C-00-M-LST-2010 (Sec.I, Sheet-14, Parts No.16 on drawing)	4 pc	Later	Later	Later	Later	Later	Later	Later	TJB56-L-1-OFF-C-00-M-LST-2010 (Sec.I, Sheet-14, Parts No.16 on drawing)	TJB56-L-1-OFF-C-MAV-M-DRD-2650	4 years	Qty.indicated is applicable for 2 Plant units-
TJB5-SS-MECH-MOP-005	5	0	MAV	01/02	AP	001	-	-	-	MAIN OIL PUMP A/B	Coupling Rubber	TOSHIBA ESS	TJB56-L-1-OFF-C-00-M-LST-2010 (Sec.I, Sheet-14, Parts No.22 on drawing)	40 pc	Later	Later	Later	Later	Later	Later	Later	TJB56-L-1-OFF-C-00-M-LST-2010 (Sec.I, Sheet-14, Parts No.22 on drawing)	TJB56-L-1-OFF-C-MAV-M-DRD-2650	4 years	Qty.indicated is applicable for 2 Plant units-
TJB5-SS-MECH-MOP-006	5	0	MAV	01/02	AP	001	-	-	-	MAIN OIL PUMP A/B	Felt Ring	TOSHIBA ESS	TJB56-L-1-OFF-C-00-M-LST-2010 (Sec.I, Sheet-14, Parts No.28 on drawing)	4 pc	Later	Later	Later	Later	Later	Later	Later	TJB56-L-1-OFF-C-00-M-LST-2010 (Sec.I, Sheet-14, Parts No.28 on drawing)	TJB56-L-1-OFF-C-MAV-M-DRD-2650	4 years	Qty.indicated is applicable for 2 Plant units-
TJB5-SS-MECH-MOP-007	5	0	MAV	01/02	AP	001	-	-	-	MAIN OIL PUMP A/B	Snap Ring	TOSHIBA ESS	TJB56-L-1-OFF-C-00-M-LST-2010 (Sec.I, Sheet-14, Parts No.29 on drawing)	4 pc	Later	Later	Later	Later	Later	Later	Later	TJB56-L-1-OFF-C-00-M-LST-2010 (Sec.I, Sheet-14, Parts No.29 on drawing)	TJB56-L-1-OFF-C-MAV-M-DRD-2650	4 years	Qty.indicated is applicable for 2 Plant units-
TJB5-SS-MECH-MOP-008	5	0	MAV	01/02	AP	001	-	-	-	MAIN OIL PUMP A/B	Double Tongue Washer	TOSHIBA ESS	TJB56-L-1-OFF-C-00-M-LST-2010 (Sec.I, Sheet-14, Parts No.30 on drawing)	48 pc	Later	Later	Later	Later	Later	Later	Later	TJB56-L-1-OFF-C-00-M-LST-2010 (Sec.I, Sheet-14, Parts No.30 on drawing)	TJB56-L-1-OFF-C-MAV-M-DRD-2650	4 years	Qty.indicated is applicable for 2 Plant units-
TJB5-SS-MECH-MOP-009	5	0	MAV	01/02	AP	001	-	-	-	MAIN OIL PUMP A/B	Double Tongue Washer	TOSHIBA ESS	TJB56-L-1-OFF-C-00-M-LST-2010 (Sec.I, Sheet-14, Parts No.31 on drawing)	48 pc	Later	Later	Later	Later	Later	Later	Later	TJB56-L-1-OFF-C-00-M-LST-2010 (Sec.I, Sheet-14, Parts No.31 on drawing)	TJB56-L-1-OFF-C-MAV-M-DRD-2650	4 years	Qty.indicated is applicable for 2 Plant units-
TJB5-SS-MECH-MOP-010	5	0	MAV	01/02	AP	001	-	-	-	MAIN OIL PUMP A/B	Double Tongue Washer	TOSHIBA ESS	TJB56-L-1-OFF-C-00-M-LST-2010 (Sec.I, Sheet-14, Parts No.32 on drawing)	48 pc	Later	Later	Later	Later	Later	Later	Later	TJB56-L-1-OFF-C-00-M-LST-2010 (Sec.I, Sheet-14, Parts No.32 on drawing)	TJB56-L-1-OFF-C-MAV-M-DRD-2650	4 years	Qty.indicated is applicable for 2 Plant units-
TJB5-SS-MECH-MOP-011	5	0	MAV	01/02	AP	001	-	-	-	MAIN OIL PUMP A/B	Double Tongue Washer	TOSHIBA ESS	TJB56-L-1-OFF-C-00-M-LST-2010 (Sec.I, Sheet-14, Parts No.33 on drawing)	32 pc	Later	Later	Later	Later	Later	Later	Later	TJB56-L-1-OFF-C-00-M-LST-2010 (Sec.I, Sheet-14, Parts No.33 on drawing)	TJB56-L-1-OFF-C-MAV-M-DRD-2650	4 years	Qty.indicated is applicable for 2 Plant units-
TJB5-SS-MECH-MOP-012	5	0	MAV	01/02	AP	001	-	-	-	MAIN OIL PUMP A/B	Double Tongue Washer	TOSHIBA ESS	TJB56-L-1-OFF-C-00-M-LST-2010 (Sec.I, Sheet-14, Parts No.34 on drawing)	16 pc	Later	Later	Later	Later	Later	Later	Later	TJB56-L-1-OFF-C-00-M-LST-2010 (Sec.I, Sheet-14, Parts No.34 on drawing)	TJB56-L-1-OFF-C-MAV-M-DRD-2650	4 years	Qty.indicated is applicable for 2 Plant units-
TJB5-SS-MECH-MOP-013	5	0	MAV	01/02	AP	001	-	-	-	MAIN OIL PUMP A/B	Impeller Washer	TOSHIBA ESS	TJB56-L-1-OFF-C-00-M-LST-2010 (Sec.I, Sheet-14, Parts No.42 on drawing)	4 pc	Later	Later	Later	Later	Later	Later	Later	TJB56-L-1-OFF-C-00-M-LST-2010 (Sec.I, Sheet-14, Parts No.42 on drawing)	TJB56-L-1-OFF-C-MAV-M-DRD-2650	4 years	Qty.indicated is applicable for 2 Plant units-
TJB5-SS-MECH-MOP-014	5	0	MAV	01/02	AP	001	-	-	-	MAIN OIL PUMP A/B	O Ring	TOSHIBA ESS	TJB56-L-1-OFF-C-00-M-LST-2010 (Sec.I, Sheet-14, Parts No.43 on drawing)	4 pc	Later	Later	Later	Later	Later	Later	Later	TJB56-L-1-OFF-C-00-M-LST-2010 (Sec.I, Sheet-14, Parts No.43 on drawing)	TJB56-L-1-OFF-C-MAV-M-DRD-2650	4 years	Qty.indicated is applicable for 2 Plant units-
TJB5-SS-MECH-MOP-015	5	0	MAV	01/02	AP	001	-	-	-	MAIN OIL PUMP A/B	Double Tongue Washer	TOSHIBA ESS	TJB56-L-1-OFF-C-00-M-LST-2010 (Sec.I, Sheet-14, Parts No.53 on drawing)	48 pc	Later	Later	Later	Later	Later	Later	Later	TJB56-L-1-OFF-C-00-M-LST-2010 (Sec.I, Sheet-14, Parts No.53 on drawing)	TJB56-L-1-OFF-C-MAV-M-DRD-2650	4 years	Qty.indicated is applicable for 2 Plant units-
TJB5-SS-MECH-MOP-016	5	0	MAV	01/02	AP	001	-	-	-	MAIN OIL PUMP A/B	Double Tongue Washer	TOSHIBA ESS	TJB56-L-1-OFF-C-00-M-LST-2010 (Sec.I, Sheet-14, Parts No.54 on drawing)	48 pc	Later	Later	Later	Later	Later	Later	Later	TJB56-L-1-OFF-C-00-M-LST-2010 (Sec.I, Sheet-14, Parts No.54 on drawing)	TJB56-L-1-OFF-C-MAV-M-DRD-2650	4 years	Qty.indicated is applicable for 2 Plant units-
TJB5-SS-MECH-MOP-017	5	0	MAV	01/02	AP	001	-	-	-	MAIN OIL PUMP A/B	O Ring	TOSHIBA ESS	TJB56-L-1-OFF-C-00-M-LST-2010 (Sec.I, Sheet-14, Parts No.62 on drawing)	4 pc	Later	Later	Later	Later	Later	Later	Later	TJB56-L-1-OFF-C-00-M-LST-2010 (Sec.I, Sheet-14, Parts No.62 on drawing)	TJB56-L-1-OFF-C-MAV-M-DRD-2650	4 years	Qty.indicated is applicable for 2 Plant units-
TJB5-SS-MECH-MOP-018	5	0	MAV	01/02	AP	001	-	-	-	MAIN OIL PUMP A/B	Double Tongue Washer	TOSHIBA ESS	TJB56-L-1-OFF-C-00-M-LST-2010 (Sec.I, Sheet-14, Parts No.67 on drawing)	16 pc	Later	Later	Later	Later	Later	Later	Later	TJB56-L-1-OFF-C-00-M-LST-2010 (Sec.I, Sheet-14, Parts No.67 on drawing)	TJB56-L-1-OFF-C-MAV-M-DRD-2650	4 years	Qty.indicated is applicable for 2 Plant units-
TJB5-SS-MECH-EOP-001	5	0	MAV	03	AP	001	-	-	-	EMERGENCY OIL PUMP	Neck Bush	TOSHIBA ESS	TJB56-L-1-OFF-C-00-M-LST-2010 (Sec.I, Sheet-15, Parts No.9 on drawing)	2 pc	Later	Later	Later	Later	Later	Later	Later	TJB56-L-1-OFF-C-00-M-LST-2010 (Sec.I, Sheet-15, Parts No.9 on drawing)	TJB56-L-1-OFF-C-MAV-M-DRD-2687	4 years	Qty.indicated is applicable for 2 Plant units-
TJB5-SS-MECH-EOP-002	5	0	MAV	03	AP	001	-	-	-	EMERGENCY OIL PUMP	Hex Bolt with Washer	TOSHIBA ESS	TJB56-L-1-OFF-C-00-M-LST-2010 (Sec.I, Sheet-15, Parts No.10 on drawing)	8 pc	Later	Later	Later	Later	Later	Later	Later	TJB56-L-1-OFF-C-00-M-LST-2010 (Sec.I, Sheet-15, Parts No.10 on drawing)	TJB56-L-1-OFF-C-MAV-M-DRD-2687	4 years	Qty.indicated is applicable for 2 Plant units-
TJB5-SS-MECH-EOP-003	5	0	MAV	03	AP	001	-	-	-	EMERGENCY OIL PUMP	Ball Bearing	TOSHIBA ESS	TJB56-L-1-OFF-C-00-M-LST-2010 (Sec.I, Sheet-15, Parts No.14 on drawing)	2 pc	Later	Later	Later	Later	Later	Later	Later	TJB56-L-1-OFF-C-00-M-LST-2010 (Sec.I, Sheet-15, Parts No.14 on drawing)	TJB56-L-1-OFF-C-MAV-M-DRD-2687	4 years	Qty.indicated is applicable for 2 Plant units-
TJB5-SS-MECH-EOP-004	5	0	MAV	03	AP	001	-	-	-	EMERGENCY OIL PUMP	Bearing Nut	TOSHIBA ESS	TJB56-L-1-OFF-C-00-M-LST-2010 (Sec.I, Sheet-15, Parts No.16 on drawing)	2 pc	Later	Later	Later	Later	Later	Later	Later	TJB56-L-1-OFF-C-00-M-LST-2010 (Sec.I, Sheet-15, Parts No.16 on drawing)	TJB56-L-1-OFF-C-MAV-M-DRD-2687	4 years	Qty.indicated is applicable for 2 Plant units-
TJB5-SS-MECH-EOP-005	5	0	MAV	03	AP	001	-	-	-	EMERGENCY OIL PUMP	Coupling Rubber	TOSHIBA ESS	TJB56-L-1-OFF-C-00-M-LST-2010 (Sec.I, Sheet-15, Parts No.22 on drawing)	16 pc	Later	Later	Later	Later	Later	Later	Later	TJB56-L-1-OFF-C-00-M-LST-2010 (Sec.I, Sheet-15, Parts No.22 on drawing)	TJB56-L-1-OFF-C-MAV-M-DRD-2687	4 years	Qty.indicated is applicable for 2 Plant units-
TJB5-SS-MECH-EOP-006	5	0	MAV	03	AP	001	-	-	-	EMERGENCY OIL PUMP	Felt Ring	TOSHIBA ESS	TJB56-L-1-OFF-C-00-M-LST-2010 (Sec.I, Sheet-15, Parts No.28 on drawing)	2 pc	Later	Later	Later	Later	Later	Later	Later	TJB56-L-1-OFF-C-00-M-LST-2010 (Sec.I, Sheet-15, Parts No.28 on drawing)	TJB56-L-1-OFF-C-MAV-M-DRD-2687	4 years	Qty.indicated is applicable for 2 Plant units-
TJB5-SS-MECH-EOP-007	5	0	MAV	03	AP	001	-	-	-	EMERGENCY OIL PUMP	Snap Ring	TOSHIBA ESS	TJB56-L-1-OFF-C-00-M-LST-2010 (Sec.I, Sheet-15, Parts No.29 on drawing)	2 pc	Later	Later	Later	Later	Later	Later	Later	TJB56-L-1-OFF-C-00-M-LST-2010 (Sec.I, Sheet-15, Parts No.29 on drawing)	TJB56-L-1-OFF-C-MAV-M-DRD-2687	4 years	Qty.indicated is applicable for 2 Plant units-
TJB5-SS-MECH-EOP-008	5	0	MAV	03	AP	001	-	-	-	EMERGENCY OIL PUMP	Double Tongue Washer	TOSHIBA ESS	TJB56-L-1-OFF-C-00-M-LST-2010 (Sec.I, Sheet-15, Parts No.30 on drawing)	16 pc	Later	Later	Later	Later	Later	Later	Later	TJB56-L-1-OFF-C-00-M-LST-2010 (Sec.I, Sheet-15, Parts No.30 on drawing)	TJB56-L-1-OFF-C-MAV-M-DRD-2687	4 years	Qty.indicated is applicable for 2 Plant units-
TJB5-SS-MECH-EOP-009	5	0	MAV	03	AP	001	-	-	-	EMERGENCY OIL PUMP	Double Tongue Washer	TOSHIBA ESS	TJB56-L-1-OFF-C-00-M-LST-2010 (Sec.I, Sheet-15, Parts No.31 on drawing)	16 pc	Later	Later	Later	Later	Later	Later	Later	TJB56-L-1-OFF-C-00-M-LST-2010 (Sec.I, Sheet-15, Parts No.31 on drawing)	TJB56-L-1-OFF-C-MAV-M-DRD-2687	4 years	Qty.indicated is applicable for 2 Plant units-
TJB5-SS-MECH-EOP-010	5	0	MAV	03	AP	001	-	-	-	EMERGENCY OIL PUMP	Double Tongue Washer	TOSHIBA ESS	TJB56-L-1-OFF-C-00-M-LST-2010 (Sec.I, Sheet-15, Parts No.32 on drawing)	16 pc	Later	Later	Later	Later	Later	Later	Later	TJB56-L-1-OFF-C-00-M-LST-2010 (Sec.I, Sheet-15, Parts No.32 on drawing)	TJB56-L-1-OFF-C-MAV-M-DRD-2687	4 years	Qty.indicated is applicable for 2 Plant units-
TJB5-SS-MECH-EOP-011	5	0	MAV	03	AP	001	-	-	-	EMERGENCY OIL PUMP	Double Tongue Washer	TOSHIBA ESS	TJB56-L-1-OFF-C-00-M-LST-2010 (Sec.I, Sheet-15, Parts No.33 on drawing)	16 pc	Later	Later	Later	Later	Later	Later	Later	TJB56-L-1-OFF-C-00-M-LST-2010 (Sec.I, Sheet-15, Parts No.33 on drawing)	TJB56-L-1-OFF-C-MAV-M-DRD-2687	4 years	Qty.indicated is applicable for 2 Plant units-
TJB5-SS-MECH-EOP-012	5	0	MAV	03	AP	001	-	-	-	EMERGENCY OIL PUMP	Double Tongue Washer	TOSHIBA ESS	TJB56-L-1-OFF-C-00-M-LST-2010 (Sec.I, Sheet-15, Parts No.34 on drawing)	8 pc	Later	Later	Later	Later	Later	Later	Later	TJB56-L-1-OFF-C-00-M-LST-2010 (Sec.I, Sheet-15, Parts No.34 on drawing)	TJB56-L-1-OFF-C-MAV-M-DRD-2687	4 years	Qty.indicated is applicable for 2 Plant units-
TJB5-SS-MECH-EOP-013	5	0	MAV	03	AP	001	-	-	-	EMERGENCY OIL PUMP	Impeller Washer	TOSHIBA ESS	TJB56-L-1-OFF-C-00-M-LST-2010 (Sec.I, Sheet-15, Parts No.42 on drawing)	2 pc	Later	Later	Later	Later	Later	Later	Later	TJB56-L-1-OFF-C-00-M-LST-2010 (Sec.I, Sheet-15, Parts No.42 on drawing)	TJB56-L-1-OFF-C-MAV-M-DRD-2687	4 years	Qty.indicated is applicable for 2 Plant units-
TJB5-SS-MECH-EOP-014	5	0	MAV	03	AP	001	-	-	-	EMERGENCY OIL PUMP	O Ring	TOSHIBA ESS	TJB56-L-1-OFF-C-00-M-LST-2010 (Sec.I, Sheet-15, Parts No.43 on drawing)	2 pc	Later	Later	Later	Later	Later	Later	Later	TJB56-L-1-OFF-C-00-M-LST-2010 (Sec.I, Sheet-15, Parts No.43 on drawing)	TJB56-L-1-OFF-C-MAV-M-DRD-2687	4 years	Qty.indicated is applicable for 2 Plant units-
TJB5-SS-MECH-EOP-015	5	0	MAV	03	AP	001	-	-	-	EMERGENCY OIL PUMP	Double Tongue Washer	TOSHIBA ESS	TJB56-L-1-OFF-C-00-M-LST-2010 (Sec.I, Sheet-15, Parts No.53 on drawing)	24 pc	Later	Later	Later	Later	Later	Later	Later	TJB56-L-1-OFF-C-00-M-LST-2010 (Sec.I, Sheet-15, Parts No.53 on drawing)	TJB56-L-1-OFF-C-MAV-M-DRD-2687	4 years	Qty.indicated is applicable for 2 Plant units-
TJB5-SS-MECH-EOP-016	5	0	MAV	03	AP	001	-	-	-	EMERGENCY OIL PUMP	Double Tongue Washer	TOSHIBA ESS	TJB56-L-1-OFF-C-00-M-LST-2010 (Sec.I, Sheet-15, Parts No.54 on drawing)	24 pc	Later	Later	Later	Later	Later	Later	Later	TJB56-L-1-OFF-C-00-M-LST-2010 (Sec.I, Sheet-15, Parts No.54 on drawing)	TJB56-L-1-OFF-C-MAV-M-DRD-2687	4 years	Qty.indicated is applicable for 2 Plant units-
TJB5-SS-MECH-EOP-017	5	0	MAV	03	AP	001	-	-	-	EMERGENCY OIL PUMP	O Ring	TOSHIBA ESS	TJB56-L-1-OFF-C-00-M-LST-2010 (Sec.I, Sheet-15, Parts No.62 on drawing)	2 pc	Later	Later	Later	Later	Later	Later	Later	TJB56-L-1-OFF-C-00-M-LST-2010 (Sec.I, Sheet-15, Parts No.62 on drawing)	TJB56-L-1-OFF-C-MAV-M-DRD-2687	4 years	Qty.indicated is applicable for 2 Plant units-
TJB5-SS-MECH-EOP-018	5	0	MAV	03	AP	001	-	-	-	EMERGENCY OIL PUMP	Double Tongue Washer	TOSHIBA ESS	TJB56-L-1-OFF-C-00-M-LST-2010 (Sec.I, Sheet-15, Parts No.67 on drawing)	8 pc	Later	Later	Later	Later	Later	Later	Later	TJB56-L-1-OFF-C-00-M-LST-2010 (Sec.I, Sheet-15, Parts No.67 on drawing)	TJB56-L-1-OFF-C-MAV-M-DRD-2687	4 years	Qty.indicated is applicable for 2 Plant units-
TJB5-SS-MECH-VPREXT-001	5	0	MAV	71/72	AN	001	-	-	-	MAIN OIL TANK VAPOUR EXTRACTOR A/B	Lantern Ring	TOSHIBA ESS	TJB56-L-1-OFF-C-00-M-LST-2010 (Sec.I, Sheet-16, Parts No.501 on drawing)	4 pc	Later	Later	Later	Later	Later	Later	Later	TJB56-L-1-OFF-C-00-M-LST-2010 (Sec.I, Sheet-16, Parts No.501 on drawing)	TJB56-L-1-OFF-C-MVB-M-DRD-2688	4 years	Qty.indicated is applicable for 2 Plant units-
TJB5-SS-MECH-VPREXT-002	5	0	MAV	71/72	AN	001	-	-	-	MAIN OIL TANK VAPOUR EXTRACTOR A/B	Oil Seal	TOSHIBA ESS	TJB56-L-1-OFF-C-00-M-LST-2010 (Sec.I, Sheet-16, Parts No.502 on drawing)	8 pc	Later	Later	Later	Later	Later	Later	Later	TJB56-L-1-OFF-C-00-M-LST-2010 (Sec.I, Sheet-16, Parts No.502 on drawing)	TJB56-L-1-OFF-C-MVB-M-DRD-2688	4 years	Qty.indicated is applicable for 2 Plant units-
TJB5-SS-MECH-VPREXT-003	5	0	MAV	71/72	AN	001	-	-	-	MAIN OIL TANK VAPOUR EXTRACTOR A/B	Packing	TOSHIBA ESS	TJB56-L-1-OFF-C-00-M-LST-2010 (Sec.I, Sheet-16, Parts No.503 on drawing)	4 pc	Later	Later	Later	Later	Later	Later	Later	TJB56-L-1-OFF-C-00-M-LST-2010 (Sec.I, Sheet-16, Parts No.503 on drawing)	TJB56-L-1-OFF-C-MVB-M-DRD-2688	4 years	Qty.indicated is applicable for 2 Plant units-
TJB5-SS-MECH-VPREXT-004	5	0	MAV	71/72	AN	001	-	-	-	MAIN OIL TANK VAPOUR EXTRACTOR A/B	Packing	TOSHIBA ESS	TJB56-L-1-OFF-C-00-M-LST-2010 (Sec.I, Sheet-16, Parts No.504 on drawing)	4 pc	Later	Later	Later	Later	Later	Later	Later	TJB56-L-1-OFF-C-00-M-LST-2010 (Sec.I, Sheet-16, Parts No.504 on drawing)	TJB56-L-1-OFF-C-MVB-M-DRD-2688	4 years	Qty.indicated is applicable for 2 Plant units-
TJB5-SS-MECH-VPREXT-005	5	0	MAV	71/72	AN	001	-	-	-	MAIN OIL TANK VAPOUR EXTRACTOR A/B	Suction Flange Packing	TOSHIBA ESS	TJB56-L-1-OFF-C-00-M-LST-2010 (Sec.I, Sheet-16, Parts No.505 on drawing)	4 pc	Later	Later	Later	Later	Later	Later	Later	TJB56-L-1-OFF-C-00-M-LST-2010 (Sec.I, Sheet-16, Parts No.505 on drawing)	TJB56-L-1-OFF-C-MVB-M-DRD-2688	4 years	Qty.indicated is applicable for 2 Plant units-
TJB5-SS-MECH-VPREXT-006	5	0	MAV	71/72	AN	001	-	-	-	MAIN OIL TANK VAPOUR EXTRACTOR A/B	Packing Liquid	TOSHIBA ESS	TJB56-L-1-OFF-C-00-M-LST-2010 (Sec.I, Sheet-16, Parts No.506 on drawing)	4 pc	Later	Later	Later	Later	Later	Later	Later	TJB56-L-1-OFF-C-00-M-LST-2010 (Sec.I, Sheet-16, Parts No.506 on drawing)	TJB56-L-1-OFF-C-MVB-M-DRD-2688	4 years	Qty.indicated is applicable for 2 Plant units-
TJB5-SS-MECH-VPREXT-007	5	0	MAV	71/72	AN	001	-	-	-	MAIN OIL TANK VAPOUR EXTRACTOR A/B	MAIN OIL TANK VAOUR EXTRACTOR	TOSHIBA ESS	TJB56-L-1-OFF-C-00-M-LST-2010	1 pc	Later	Later	Later	Later	Later	Later	Later	TJB56-L-1-OFF-C-00-M-LST-2010	TJB56-L-1-OFF-C-MVB-M-DRD-2688	Replace when demanded	Qty.indicated is applicable for 2 Plant units-
TJB5-SS-MECH-MOS-001	5	0	MAV	16/17	AT	001	-	-	-	MAIN OIL STRAINER	MAIN OIL STRAINER	TOSHIBA ESS	TJB56-L-1-OFF-C-00-M-LST-2010	4 pc	Later	Later	Later	Later	Later	Later	Later	TJB56-L-1-OFF-C-00-M-LST-2010	TJB56-L-1-OFF-C-MAV-M-DRD-2651	Replace when demanded	Qty.indicated is applicable for 2 Plant units-