Downloaded on 30 September 2024 11:18 | Tri Okta Ervina - ENG BJS

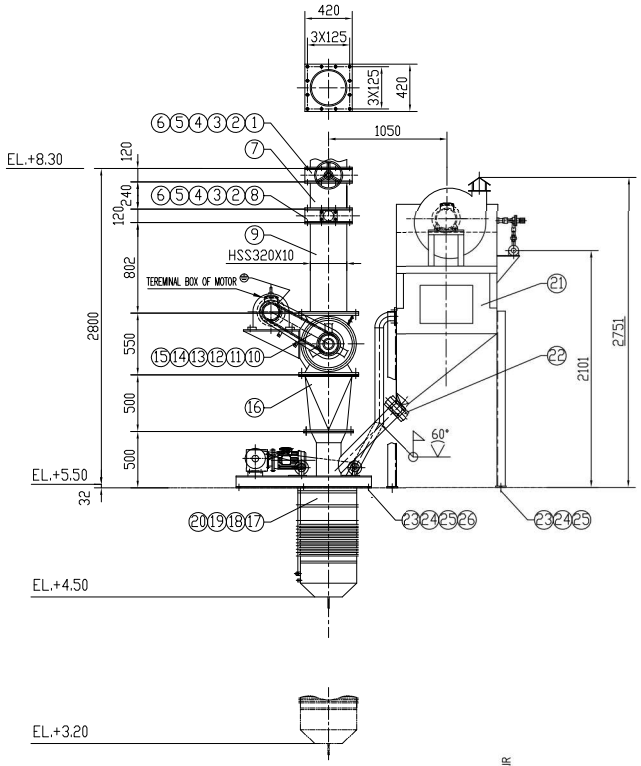

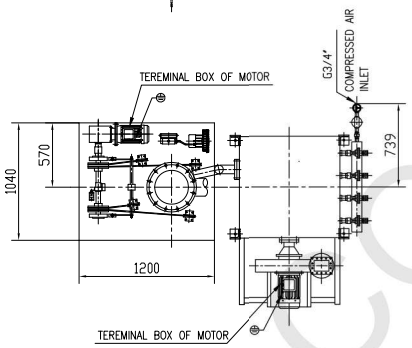

BASIC PLAN

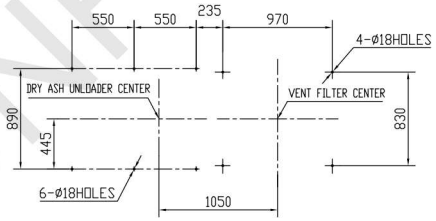

NO	MARK OR CODE	DESCRIPTION	QTY	MATERIAL	WEIGHT(KG) SINGLE	WEIGHT(KG) TOTAL	REMARK (KKS)
16	TJB56-0707-03	ADAPTOR (3)	1	Q235-B	35	35	
17	TSZM-100	DRY ASH UNLOADER Q=100t/h	1		1250	1250	50ETE03AF001KF01
18	GB/T5780-2000	BOLT-M16X50	12	GRADE C	0.09	1.08	
19	GB/T6170-2015	NUT-M16	12	GRADE 6	0.029	0.35	
20	GB95-85	WASHER-16	12	140HV	0.01	0.12	
21	DMC16-00	VENT FILTER F=6 m²	1	COMBINED PIECE	950	950	50ETE04AT002KT01
22	5"(ANSI 150CLASS)	PNEUMATIC BUTTERFLY VALVE	1	COMBINED PIECE	15	15	WITH CONN. ACCESSORIES 50ETE10AA206
23	GB/T5780-2000	BOLT-M16X50	10	GRADE C	0.09	0.54	
24	GB/T6170-2015	NUT-M16	10	GRADE 6	0.029	0.29	
25	GB93-87	WASHER-16	10	65Mn	0.01	0.10	
26	GB853-88	WASHER-16	6	Q235-B	0.017	0.10	

TOTAL WEIGHT: 2946.4 KG

NO	MARK OR CODE	DESCRIPTION	QTY	MATERIAL	WEIGHT(KG) SINGLE	WEIGHT(KG) TOTAL	REMARK(KKS)
1	TZ300X300	MANUAL GATE VALVE	1	COMBINED PIECE	45	45	50ETE10AA002
2	GB/T5780-2000	BOLTS-M12X45	48	GRADE C	0.04	1.92	
3	GB/T6170-2015	NUTS-M12	48	GRADE 6	0.012	0.58	
4	GB95-85	WASHER-12	48	140HV	0.003	0.14	
5	GB853-88	WASHER-12	48	Q235-B	0.017	0.82	
6		SEAL GASKET THK 2MM	2	RUBBER			
7	TJB56-0707-01	ADAPTOR (1)	1	Q235-B	28	28	
8	TZQ300X300	PNEUMATIC GATE VALVE	1	COMBINED PIECE	65	65	50ETE10AA202
9	TJB56-0707-02	ADAPTOR (2)	1	Q235-B	96	96	
10	TG-100	ROTARY FEEDER Q=100t/h	1	COMBINED PIECE	450	450	50ETE05AB002KF01
11	GB/T5780-2000	BOLT-M16X60	16	GRADE C	0.10	0.16	
12	GB/T6170-2015	NUTS-M16	16	GRADE 6	0.029	0.37	
13	GB95-85	WASHER-16	24	140HV	0.01	0.24	
14	GB/T5780-2000	BOLT-M16X35	8	GRADE C	0.06	0.48	
15		SEAL GASKET THK 2MM	2	RUBBER			

TECHNICAL SPECIFICATION SHEET

ROTARY FEEDER		DRY ASH UNLOADER & VENT FILTER	
TYPE	TG-100	TYPE	TSZM-100
CAPACITY	100 t/h	CAPACITY	100 t/h
SPECIFICATION	400X400 mm	TELESCOPE FLEXING DISTANCE	1300mm
REDUCER TYPE	R77M2BAX 100LB	TELESCOPE LIFTING SPEED	0.10 m/s
POWER	3 Kw	REDUCER TYPE	S57M2BAX 80MB
ROTARY SPEED	32 r/min	POWER	0.75 Kw
		FEED COMPUTATION TYPE PRESSURE	PRESSURE
		CONTROL MODE	MANUAL/AUTE
		FAN TYPE	4-72NO3.6A
		FAN FLOW/PRESSURE	2000m³/h /400Pa
		MOTOR TYPE/POWER/VOLTAGE	M2BAX 100LB/3KW/AC380V
		BAG FILTER BLOWER CAPACITY	DMC-6
		FILTER BAG, PCS	16
		FILTER AREA	6 m²
		FILTER BAG	ø130X800mm
		RESISTANCE PRESSURE	1200~1500pa
		AIR SPEED	0.8m/min
		AIR BLOWING PRESSURE	0.5~0.7MPa
		WORKING TEMPERATURE	<120°C
		FILTER EFFICIENCY	99.95%
		AIR CONSUMPTION	≈ 0.25m³/min
		ELECTROMAGNETISM VALVE	4 PCS
		PNEUMATIC BUTTERFLY VALVE	5" (ANSI 150CLASS)

NOTE:

1. THIS INSTALLATION DRAWING IS JUST FOR THE EQUIPMENTS OF UNIT 5. THIS EQUIPMENTS OF UNIT 6 WILL BE A MIRROR-IMAGE OF UNITS.
2. ALL DIMENSIONS ARE IN MM UNLESS NOTED OTHERWISE.
3. REGARDING THE LOCATION OF EQUIPMENT, PLEASE SEE THE GA & PIPING ARRANGEMENT GRAWINGS, TJB-56-L3-OFF-U5-ETE-M-DGA-0002, TJB-56-L3-OFF-U6-ETE-M-DGA-0003, TJB-56-L3-OFF-U6-ETE-M-DGA-0714, TJB-56-L3-OFF-U6-ETE-M-DGA-0715.
4. KKS CODE SHOWN IN THIS DRAWING IS APPLIED FOR UNIT 5 ONLY. WHEN THIS DRAWING IS UNSED FOR UNIT 6,THE FIRST TWO NUMBERS OF KKS CODE SHALL BE CHANGED FROM "50" TO "60".

FOR CONSTRUCTION

NO	DD/MMM/YY	REVISIONS AND RECORD OF ISSUE	BY	DES	CHKD	PDE	APPD
0	21/NOV/18	ISSUED FOR CONSTRUCTION	YD		SAM		XZC

OWNER: PT.Bhumi Jati Power

PROJECT TITLE: TANJUNG JATI B EXPANSION (JAWA-4) COAL FIRED STEAM POWER PLANT 2 x 1,000 MW

OWNER'S ENGINEER: PÖYRY

EPC CONTRACTORS: Sumitomo Corporation; PT. Wasa Mitra Engineering; AvantPower Japan Ltd.

PROJECT DRAWING NO. TJB56-L3-OFF-C-ETE-M-DGA-0707 REV. 0

INSTALLATION DRAWING FOR DRY ASH UNLOADER SYSTEM

APPD/ENGR	XZC	BY	YD	UNITS	VIEW
CHKD	SAM	DD/MMM/YY	21/NOV/18	MM	PLAN/1ST

EPC LOT3 SUB-CONTRACTOR: BLACK & VEATCH

SPEC NAME: BOTTOM ASH SILO AND EQUIPMENT

SPEC NO. 67.0415

EPC LOT3 SUB-CONTRACTOR DRAWING NO. TJB56-0707

WUXI HUADIAN

SHEET NO. 1_OF_1_ REV. 0

ACAD 10.c7 1=30

USERNAME BORDER_SIZE DATE TIME

CONFIDENTIAL

Uncontrolled when printed or downloaded. Verify that this is the correct version before use.
Reproduction of part or all the contents of the document is prohibited without written permission from PT. Bhumi Jepara Service