Downloaded on 30 September 2024 11:08 | Tri Okta Ervina - ENG BJS

	ハブ HUB
下穴径 Rough bore	ø 88
最大軸径 Max bore dia	ø 160
基準トルク Rated torque	33232 N-m (3391 Kg-m)
最高回転数 Max speed	2420 min⁻¹

WT = 83.2 Kg
GD² = 3.871 Kg-m²

グリース 給脂量 Grease volume	0.927 kg (1.030 ℓ)

無記号表面アラサ SURFACES MARKED EXCEPT AS NOTED 50-S ▽→▽, 25-S ▽▽→▽▽, 6.3-S ▽▽▽→▽▽▽

機械加工施配号公差 GENERAL TOLERANCE	1 ~ 4	4 ~ 16	16 ~ 63	63 ~ 250	250 ~ 1000	1000 ~ 2000	2000 ~ 5000
	±0.1	±0.2	±0.3	±0.5	±0.8	±1.5	±2.0

ゾーニング ZONE	訂正 REV	来歴 DESCRIPTION	年月日 DATE	氏名 NAME
		CET-180420-401		
	△1	Postscript	05/16-'18	S-H

仕様 SPECIFICATION		
伝達動力 POWER	132	KW
回転数 SPEED	106	min⁻¹
常用トルク NORMAL TORQUE	11460 (	N-m Kg-m)
最大トルク MAX TORQUE	17190 (	N-m Kg-m)

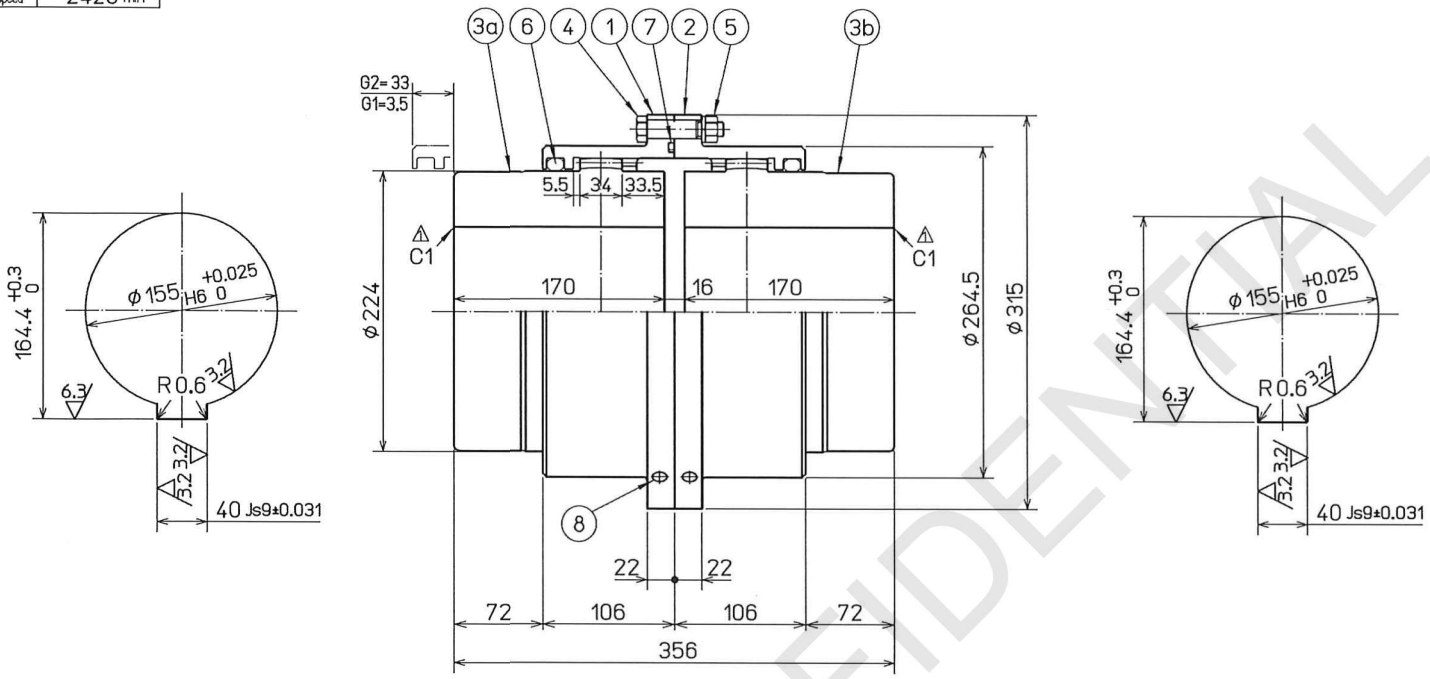

Kyushu Hasec Co.Ltd. TEL-03 NOV. 05. 2018 3732-4151 TOKYO BRANCH

FINAL DWG

CONFIDENTIAL

O/# A8LCS-0
エ-分-葉 BK1BA88-0430-0231
CONST.NAME 2500t/h(for Tanjung JAti B)
Q'TY 2sets

品番 PARTNO.	品名 PART NAME	材質 MATL	個数 QTY	備考 REMARKS
8	GREASE NIPPLE	BsBM	4	A-PT1/4
7	O-RING	NBR	1	ø259.3 × ø5.7
6	O-RING	NBR	2	ø222.5 × ø12
5	NUT	S45C	14	M12 -P1.25
4	REAMER BOLT	SCM435 Ⓠ Ⓣ	14	M12 × ø15
3	HUB A,B	S45C Ⓝ (Equivalence)	2	
2	SLEEVE B	S45C Ⓝ (Equivalence)	1	
1	SLEEVE A	S45C Ⓝ (Equivalence)	1	

設計 DESIGN			縮尺 SCALE	名称 TITLE
製図 DRAWN	S-Hirano	05/01-'18	1/4	NSS-315
審査 CHKD	S-Hirano	05/16-'18	第三角法 THIRD ANG	GEAR COUPLING
承認 APPD	H-Katoh	05/16-'18		IHI Transport Machinery Co.,Ltd.
	H-Katoh	05/16-'18		

株式会社 九州ハセック KYUSHU HASEC

図番 DWG NO. (1804270001-SS315GE-A) △1 1804270001-00A

工事番号 NO. OF WORK	台数 QTY
1804270001	2s

Uncontrolled when printed or downloaded. Verify that this is the correct version before use.
Reproduction of part or all the contents of the document is prohibited without written permission from PT. Rhumi Jepara Service