Standard conveyor chain (F roller type)

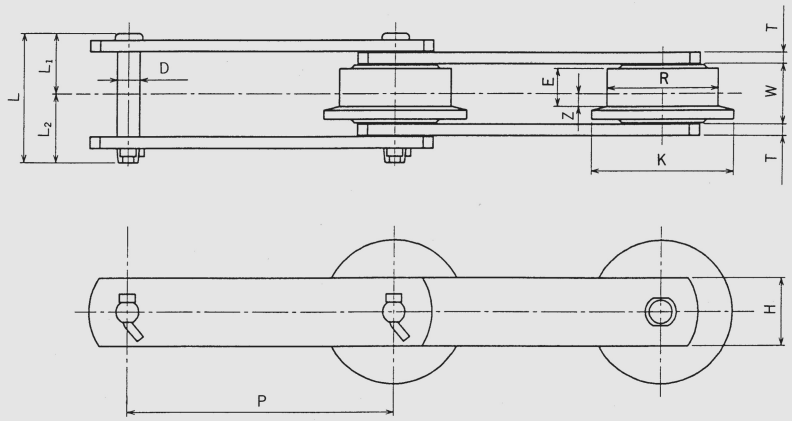

Chain No.	pitch P (mm)	Roller				Inner width W (mm)	Pin				Link plate		Average ultimate strength		Mass (kg/m)
		Outer Dia. R (mm)	face width E (mm)	Flange diameter K (mm)	Offset Z (mm)		Dia. D (mm)	Length L (mm)	Length L_1 (mm)	Length L_2 (mm)	Height H (mm)	Thickness T (mm)	(kN)	(kgf)	
HRS03075-F	75	30.0	10.6	38	3.6	16.0	7.9	38.0	16.8	21.2	22.2	3.2	29.4	3000	2.4
HRS03100-F	100														2.1
HRS03150-F	150														1.8
HRS05100-F	100	40.0	14.5	50	4.8	22.0	11.0	53.4	23.9	29.5	31.8	4.7	68.6	7000	5.0
HRS05150-F	150														4.1
HR10108-F	101.6	44.5	18.0	55	6.5	27.0	11.0	65.7	30.6	35.1	28.6	6.3	78.5	8000	7.2
HR15208-F	152.4	50.8	20.0	65	7.0	30.2		68.0	31.4	36.6	38.1				8.0
HR10011-F	100	50.8	20.0	65	7.0	30.2	14.2	72.2	32.8	39.4	38.1	6.3	112.8	11500	10.0
HR15011-F	150														8.1
HR10113-F	101.6	44.5	20.0	60	7.0	31.6	15.8	81.3	37.3	44.0	38.1	7.9	132.4	13500	11.0
HR15215-F	152.4	57.2	25.0	75	9.0	37.1	15.8	87.5	40.0	47.5	44.5	7.9	186.3	19000	12.4
HR20015-F	200	65.0	24.0	85	8.0										12.4
HR25015-F	250														10.6
HR20019-F	200	80.0	34.0	105	12.0	51.4	18.9	111.3	51.4	59.9	50.8	9.5	245.2	25000	19.8
HR25019-F	250														17.3
HR30019-F	300														15.7
HR25026-F	250	100.0	38.0	130	13.0	57.2	22.1	119.6	55.3	64.3	63.5	9.5	313.8	32000	29.0
HR30026-F	300														23.6
HR45026-F	450														18.9
HR30048-F	300	125.0	42.0	160	14.0	66.7	25.2	143.7	67.6	76.1	76.2	12.7	475.6	48500	45.0
HR45048-F	450														31.9
HR60048-F	600														27.8
HR30054-F	300	140.0	49.0	180	16.5	77.0	31.6	169.3	81.6	87.7	76.2	16.0	529.6	54000	48.0
HR45054-F	450														39.3
HR60054-F	600														34.3